QN16-C1

安装孔尺寸 Mounting hole size:Φ16mm
开关额定值 Switch rating:3A/250VAC
开关组合 Switch combination:1NO1NC/2NO2NC
操作类型 Operation types:自复式 Resetable
自锁式 Self-locking
头部形状 Head shape:平形 Flat
带灯方式 Lamp type:环形带灯 Ring Illuminated
外壳材料:黄铜镀镍/不锈钢
Enclosure material:nickel plated brass/stainless stell
防护等级 Degree of protection:IP67,IK08
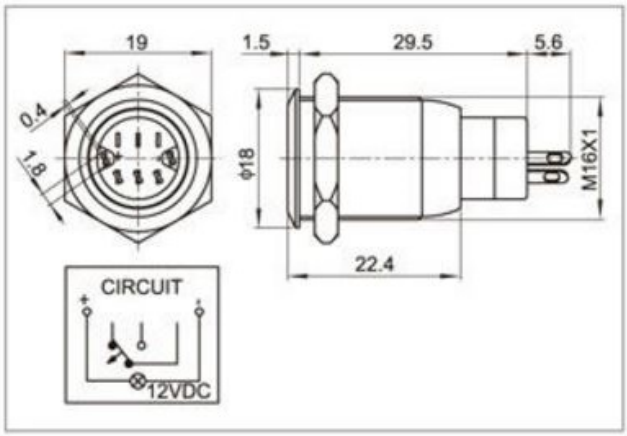
Specifications	QN16-C1
Tail configuration	接线插片 Connection terminal(1.8×0.4)
Switch specifications	3A/250VAC
Contact resistance	≤50mΩ
Insulation resistance	≥1000MΩ
Dielectric Intensity	2000VAC
Ambient temperature	-20℃~+55℃
Mechanical life	50万次以上 500,000 cycles
Electrical life	5万次以上 50,000 cycles
Panel thickness	1~15mm
Nut torque	5~14Nm
Operation pressure	约3~5N About 3~5N
Operation stroke	约2.8mm About 2.8mm
Protection level	IP67，IK10
Contact	银合金 Silver alloy
Button	黄铜镀镍/不锈钢 Nickel plated brass/stainless stell
Enclosure	黄铜镀镍/不锈钢 Nickel plated brass/stainless stell
Base	PBT
LED type	环形带灯Ring Illuminated(LED)
Rated voltage	6V/12V/24V/110V/220V
LED color	■ O Y ■ ■ Ⅱ
LED life	40000小时hours