CD54HC299, CD74HC299, CD54HCT299, CD74HCT299

Data sheet acquired from Harris Semiconductor
SCHS178C

January 1998 - Revised May 2003

High-Speed CMOS Logic 8-Bit Universal Shift Register; Three-State

Features

- **Buffered Inputs**
- **Four Operating Modes: Shift Left, Shift Right, Load and Store**
- **Can be Cascaded for N-Bit Word Lengths**
- **I/O_0 - I/O_7 Bus Drive Capability and Three-State for Bus Oriented Applications**
- **Typical f_{MAX} = 50MHz at V_{CC} = 5V, C_L = 15pF, T_A = 25^oC**
- **Fanout (Over Temperature Range)**
  - **Standard Outputs . . . . . 10 LSTTL Loads**
  - **Bus Driver Outputs . . . . . 15 LSTTL Loads**
- **Wide Operating Temperature Range . . . -55^oC to 125^oC**
- **Balanced Propagation Delay and Transition Times**
- **Significant Power Reduction Compared to LSTTL Logic ICs**
- **HC Types**
  - **2V to 6V Operation**
  - **High Noise Immunity: N_{IL} = 30%, N_{IH} = 30% of V_{CC} at V_{CC} = 5V**
- **HCT Types**
  - **4.5V to 5.5V Operation**
  - **Direct LSTTL Input Logic Compatibility, V_{IL}= 0.8V (Max), V_{IH} = 2V (Min)**
  - **CMOS Input Compatibility, $I_I \leq 1\mu A$ at V_{OL}, V_{OH}**

Pinout

CD54HC299, CD54HCT299
(CERDIP)
CD74HC299, CD74HCT299
(PDIP, SOIC)
TOP VIEW

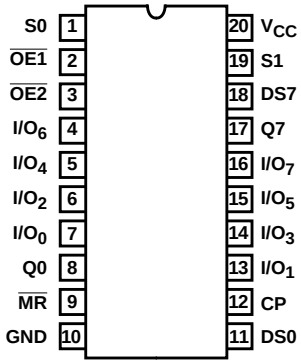

Description

The ’HC259 and ’HCT299 are 8-bit shift/storage registers with three-state bus interface capability. The register has four synchronous-operating modes controlled by the two select inputs as shown in the mode select (S0, S1) table. The mode select, the serial data (DS0, DS7) and the parallel data (I/O_0 - I/O_7) respond only to the low-to-high transition of the clock (CP) pulse. S0, S1 and data inputs must be stable one set-up time prior to the clock positive transition.

The Master Reset ($\overline{MR}$) is an asynchronous active low input. When $\overline{MR}$ output is low, the register is cleared regardless of the status of all other inputs. The register can be expanded by cascading same units by tying the serial output (Q0) to the serial data (DS7) input of the preceding register, and tying the serial output (Q7) to the serial data (DS0) input of the following register. Recirculating the (n x 8) bits is accomplished by tying the Q7 of the last stage to the DS0 of the first stage.

The three-state input/output I(/O) port has three modes of operation:

1. Both output enable ($\overline{OE1}$ and $\overline{OE2}$) inputs are low and S0 or S1 or both are low, the data in the register is presented at the eight outputs.
2. When both S0 and S1 are high, I/O terminals are in the high impedance state but being input ports, ready for parallel data to be loaded into eight registers with one clock transition regardless of the status of $\overline{OE1}$ and $\overline{OE2}$.
3. Either one of the two output enable inputs being high will force I/O terminals to be in the off-state. It is noted that each I/O terminal is a three-state output and a CMOS buffer input.

Ordering Information

PART NUMBER	TEMP. RANGE (^oC)	PACKAGE
CD54HC299F3A	-55 to 125	20 Ld CERDIP
CD54HCT299F3A	-55 to 125	20 Ld CERDIP
CD74HC299E	-55 to 125	20 Ld PDIP
CD74HC299M	-55 to 125	20 Ld SOIC
CD74HC299M96	-55 to 125	20 Ld SOIC
CD74HCT299E	-55 to 125	20 Ld PDIP
CD74HCT299M	-55 to 125	20 Ld SOIC
CD74HCT299M96	-55 to 125	20 Ld SOIC

NOTE: When ordering, use the entire part number. The suffix 96 denotes tape and reel.

CAUTION: These devices are sensitive to electrostatic discharge. Users should follow proper IC Handling Procedures.
Copyright © 2003, Texas Instruments Incorporated

Functional Diagram

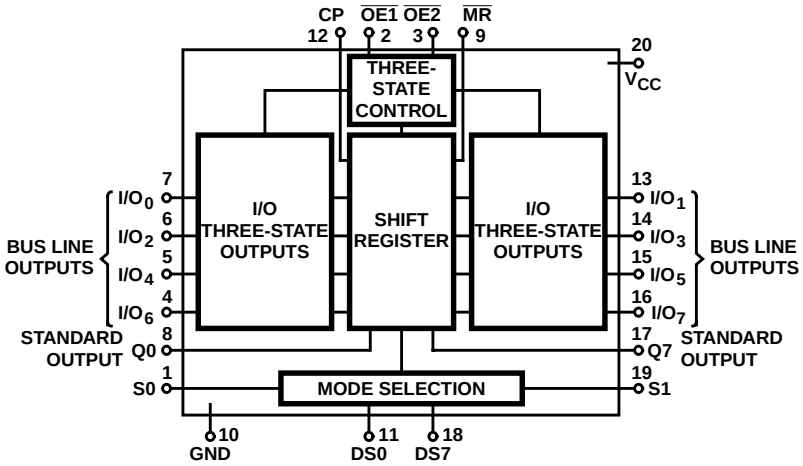

MODE SELECT FUNCTION TABLE THREE-STATE I/O PORT OPERATING MODE

FUNCTION	INPUTS					INPUTS/OUTPUTS
	$\overline{OE1}$	$\overline{OE2}$	S0	S1	Qn (REGISTER)	I/O0 --- I/O7
Read Register	L	L	L	X	L	L
	L	L	L	X	H	H
	L	L	X	L	L	L
	L	L	X	L	H	H
Load Register	X	X	H	H	Qn = I/On	I/On = Inputs
Disable I/O	H	X	X	X	X	(Z)
	X	H	X	X	X	(Z)

TRUTH TABLE

FUNCTION	INPUTS							REGISTER OUTPUTS				
	$\overline{MR}$	CP	S0	S1	DS0	DS7	I/On	Q0	Q1	---	Q6	Q7
RESET (CLEAR)	**L**	**X**	**X**	**X**	**X**	**X**	**X**	**L**	**L**	**---**	**L**	**L**
Shift Right	H	↑	h	l	l	X	X	L	q_0	---	q_5	q_6
	H	↑	h	l	h	X	X	H	q_0	---	q_5	Q6
Shift Left	H	↑	l	h	X	l	X	q_1	q2	---	q_7	L
	H	↑	l	h	X	h	X	q_1	q_2	---	q_7	H
Hold (Do Nothing)	H	↑	l	l	X	X	X	q_0	q_1	---	q_6	q_7
Parallel Load	H	↑	h	h	X	X	l	L	L	---	L	L
	H	↑	h	h	X	X	h	H	H	---	H	H

H = Input Voltage High Level, h = Input voltage high one set-up timer prior clock transition; L = Input Voltage Low Level; l = Input voltage low one set-up time prior to clock transition; qn = Lower case letter indicates the state of the reference output one set-up time prior to clock transition; X - Voltage level on logic status don't care; Z = Output in high impedance state, ↑ = Low to High Clock Transition.

Absolute Maximum Ratings

DC Supply Voltage, V_{CC} . . . . . -0.5V to 7V
DC Input Diode Current, I_{IK}
For V_I < -0.5V or V_I > V_{CC} + 0.5V . . . . . ±20mA
DC Output Diode Current, I_{OK}
For V_O < -0.5V or V_O > V_{CC} + 0.5V . . . . . ±20mA
DC Drain Current, per Output, I_O, For -0.5V < V_O < V_{CC} + 0.5V
For Q Outputs . . . . . ±25mA
For I/O Outputs . . . . . ±35mA
DC Output Source or Sink Current per Output Pin, I_O
For V_O > -0.5V or V_O < V_{CC} + 0.5V . . . . . ±25mA
DC V_{CC} or Ground Current, I_{CC} . . . . . ±50mA

Operating Conditions

Temperature Range, T_A . . . . . -55^oC to 125^oC
Supply Voltage Range, V_{CC}
HC Types . . . . . 2V to 6V
HCT Types . . . . . 4.5V to 5.5V
DC Input or Output Voltage, V_I, V_O . . . . . 0V to V_{CC}
Input Rise and Fall Time
2V . . . . . 1000ns (Max)
4.5V. . . . . 500ns (Max)
6V . . . . . 400ns (Max)

Thermal Information

Thermal Resistance (Typical, Note 1) θ_{JA} ($^oC/W$)
E (PDIP) Package 69
M (SOIC) Package. 58
Maximum Junction Temperature . . . . . 150^oC
Maximum Storage Temperature Range . . . . . -65^oC to 150^oC
Maximum Lead Temperature (Soldering 10s) . . . . . 300^oC
(SOIC - Lead Tips Only)

CAUTION: Stresses above those listed in "Absolute Maximum Ratings" may cause permanent damage to the device. This is a stress only rating and operation of the device at these or any other conditions above those indicated in the operational sections of this specification is not implied.

NOTE:

1. The package thermal impedance is calculated in accordance with JESD 51-7.

DC Electrical Specifications

PARAMETER	SYMBOL	TEST CONDITIONS V_I (V)	TEST CONDITIONS I_O (mA)	V_{CC} (V)	25°C MIN	25°C TYP	25°C MAX	-40°C TO 85°C MIN	-40°C TO 85°C MAX	-55°C TO 125°C MIN	-55°C TO 125°C MAX	UNITS
HC TYPES												
High Level Input Voltage	V_{IH}	-	-	2	1.5	-	-	1.5	-	1.5	-	V
				4.5	3.15	-	-	3.15	-	3.15	-	V
				6	4.2	-	-	4.2	-	4.2	-	V
Low Level Input Voltage	V_{IL}	-	-	2	-	-	0.5	-	0.5	-	0.5	V
				4.5	-	-	1.35	-	1.35	-	1.35	V
				6	-	-	1.8	-	1.8	-	1.8	V
High Level Output Voltage CMOS Loads	V_{OH}	V_{IH} or V_{IL}	-0.02	2	1.9	-	-	1.9	-	1.9	-	V
				4.5	4.4	-	-	4.4	-	4.4	-	V
				6	5.9	-	-	5.9	-	5.9	-	V
High Level Output Voltage TTL Loads			Qn / I/On	-	-	-	-	-	-	-	-	V
			-4 / -6	4.5	3.98	-	-	3.84	-	3.7	-	V
			-5.2 / -7.8	6	5.48	-	-	5.34	-	5.2	-	V
Low Level Output Voltage CMOS Loads	V_{OL}	V_{IH} or V_{IL}	0.02	2	-	-	0.1	-	0.1	-	0.1	V
				4.5	-	-	0.1	-	0.1	-	0.1	V
				6	-	-	0.1	-	0.1	-	0.1	V
Low Level Output Voltage TTL Loads			Qn / I/On	-	-	-	-	-	-	-	-	V
			4 / 6	4.5	-	-	0.26	-	0.33	-	0.4	V
			5.2 / 7.8	6	-	-	0.26	-	0.33	-	0.4	V
Input Leakage Current	I_I	V_{CC} or GND	-	6	-	-	±0.1	-	±1	-	±1	µA

DC Electrical Specifications (Continued)

PARAMETER	SYMBOL	TEST CONDITIONS		V_{CC} (V)	25°C			-40°C TO 85°C		-55°C TO 125°C		UNITS
		V_I (V)	I_O (mA)		MIN	TYP	MAX	MIN	MAX	MIN	MAX	
Quiescent Device Current	I_{CC}	V_{CC} or GND	0	6	-	-	8	-	80	-	160	µA
Three- State Leakage Current	V_{IL} or V_{IH}	$V_O = V_{CC}$ or GND	-	6	-	-	±0.5	-	±5	-	±10	µA
HCT TYPES												
High Level Input Voltage	V_{IH}	-	-	4.5 to 5.5	2	-	-	2	-	2	-	V
Low Level Input Voltage	V_{IL}	-	-	4.5 to 5.5	-	-	0.8	-	0.8	-	0.8	V
High Level Output Voltage CMOS Loads	V_{OH}	V_{IH} or V_{IL}	-0.02	4.5	4.4	-	-	4.4	-	4.4	-	V
High Level Output Voltage TTL Loads			-4	4.5	3.98	-	-	3.84	-	3.7	-	V
Low Level Output Voltage CMOS Loads	V_{OL}	V_{IH} or V_{IL}	0.02	4.5	-	-	0.1	-	0.1	-	0.1	V
Low Level Output Voltage TTL Loads			4	4.5	-	-	0.26	-	0.33	-	0.4	V
Input Leakage Current	I_I	V_{CC} and GND	0	5.5	-		±0.1	-	±1	-	±1	µA
Quiescent Device Current	I_{CC}	V_{CC} or GND	0	5.5	-	-	8	-	80	-	160	µA
Three- State Leakage Current	V_{IL} or V_{IH}	$V_O = V_{CC}$ or GND	-	6	-	-	±0.5	-	±5	-	±10	µA
Additional Quiescent Device Current Per Input Pin: 1 Unit Load	ΔI_{CC} (Note 2)	V_{CC} -2.1	-	4.5 to 5.5	-	100	360	-	450	-	490	µA

NOTE:

2. For dual-supply systems theoretical worst case (V_I = 2.4V, V_{CC} = 5.5V) specification is 1.8mA.

HCT Input Loading Table

INPUT	UNIT LOADS
S1, $\overline{MR}$	0.25
I/O_0 - I/O_7	0.25
DS0, DS7	0.25
S0, CP	0.6
$\overline{OE1}$, $\overline{OE2}$	0.3

NOTE: Unit Load is ΔI_{CC} limit specific in Static Specifications Table, e.g., 360µA max. at 25°C.

Prerequisite for Switching Specifications

PARAMETER	SYMBOL	V_{CC} (V)	25°C			-40°C TO 85°C			-55°C TO 125°C			UNITS
			MIN	TYP	MAX	MIN	TYP	MAX	MIN	TYP	MAX	
HC TYPES												
Maximum Clock Frequency	f_{MAX}	2	6	-	-	5	-	-	4	-	-	MHz
		4.5	30	-	-	25	-	-	20	-	-	MHz
		6	35	-	-	29	-	-	23	-	-	MHz
$\overline{MR}$ Pulse Width	t_W	2	50	-	-	65	-	-	75	-	-	ns
		4.5	10	-	-	13	-	-	15	-	-	ns
		6	9	-	-	11	-	-	13	-	-	ns
Clock Pulse Width	t_W	2	80	-	-	100	-	-	120	-	-	ns
		4.5	16	-	-	20	-	-	24	-	-	ns
		6	14	-	-	17	-	-	20	-	-	ns
Setup Time DS0, DS7, I/On to Clock	t_{SU}	2	100	-	-	125	-	-	150	-	-	ns
		4.5	20	-	-	25	-	-	30	-	-	ns
		6	17	-	-	21	-	-	26	-	-	ns
Hold Time DS0, DS7, I/On, S0, S1 to Clock	t_H	2	0	-	-	0	-	-	0	-	-	ns
		4.5	0	-	-	0	-	-	0	-	-	ns
		6	0	-	-	0	-	-	0	-	-	ns
Recovery Time $\overline{MR}$ to Clock	t_{REC}	2	5	-	-	5	-	-	5	-	-	ns
		4.5	5	-	-	5	-	-	5	-	-	ns
		6	5	-	-	5	-	-	5	-	-	ns
Setup Time S1, S0 to Clock	t_{SU}	2	120	-	-	150	-	-	180	-	-	ns
		4.5	24	-	-	30	-	-	36	-	-	ns
		6	20	-	-	26	-	-	31	-	-	ns
HCT TYPES												
Maximum Clock Frequency	f_{MAX}	4.5	25	-	-	20	-	-	16	-	-	MHz
$\overline{MR}$ Pulse Width	t_W	4.5	15	-	-	19	-	-	22	-	-	ns
Clock Pulse Width	t_W	4.5	20	-	-	25	-	-	30	-	-	ns
Setup Time DS0, DS7, I/On, S0, S1 to Clock	t_{SU}	4.5	20	-	-	25	-	-	30	-	-	ns
Hold Time DS0, DS7, I/On, S0, S1 to Clock	t_H	4.5	0	-	-	0	-	-	0	-	-	ns
Recovery Time $\overline{MR}$ to Clock	t_{REC}	4.5	5	-	-	5	-	-	5	-	-	ns
Setup Time S1, S0 to Clock	t_{SU}	4.5	27	-	-	34	-	-	41	-	-	ns

Switching Specifications C_L = 50pF, Input t_r, t_f = 6ns

PARAMETER	SYMBOL	TEST CONDITIONS	V_{CC} (V)	25°C			-40°C TO 85°C		-55°C TO 125°C		UNITS
				MIN	TYP	MAX	MIN	MAX	MIN	MAX	
HC TYPES											
Propagation Delay Clock to I/O Output, Clock to Q0 and Q7, $\overline{MR}$ to Output	t_{PLH}, t_{PHL}	C_L = 50pF	2	-	-	200	-	250	-	300	ns
			4.5	-	-	40	-	50	-	60	ns
		C_L = 15pF	5	-	17	-	-	-	-	-	ns
		C_L = 50pF	6	-	-	34	-	43	-	51	ns
Output Enable and Disable Times	t_{PZL}	C_L = 15pF	5	-	10	-	-	-	-	-	ns
	t_{PZH}, t_{PLZ}			-	13	-	-	-	-	-	ns
	t_{PHZ}			-	15	-	-	-	-	-	ns
Output High-Z to High Level	t_{PZH}	C_L = 50pF	2	-	-	155	-	195	-	235	ns
			4.5	-	-	31	-	39	-	47	ns
			6	-	-	26	-	33	-	40	ns
Output High Level to High-Z	t_{PHZ}	C_L = 50pF	2	-	-	185	-	230	-	280	ns
			4.5	-	-	37	-	46	-	56	ns
			6	-	-	31	-	39	-	48	ns
Output Low Level to High-Z	t_{PLZ}	C_L = 50pF	2	-	-	155	-	195	-	235	ns
			4.5	-	-	31	-	39	-	47	ns
			6	-	-	26	-	33	-	40	ns
Output High-Z to Low Level	t_{PZL}	C_L = 50pF	2	-	-	130	-	165	-	195	ns
			4.5	-	-	26	-	33	-	39	ns
			6	-	-	22	-	28	-	33	ns
Output Transition Time Q0, Q7	t_{THL}, t_{TLH}	C_L = 50pF	2	-	-	75	-	95	-	110	ns
			4.5	-	-	15	-	19	-	22	ns
			6	-	-	13	-	16	-	19	ns
I/O_0 to I/O_7	t_{THL}, t_{TLH}	C_L = 50pF	2	-	-	60	-	75	-	90	ns
			4.5	-	-	12	-	15	-	18	ns
			6	-	-	10	-	13	-	15	ns
Input Capacitance	C_I	C_L = 50pF	-	10	-	10	-	10	-	10	pF
Three-State Output Capacitance	C_O	-	-	20	-	20	-	20	-	20	pF
Power Dissipation Capacitance (Notes 3, 4)	C_{PD}	C_L = 15pF	5	-	150	-	-	-	-	-	pF

Switching Specifications C_L = 50pF, Input t_r, t_f = 6ns **(Continued)**

PARAMETER	SYMBOL	TEST CONDITIONS	V_{CC} (V)	25°C MIN	25°C TYP	25°C MAX	-40°C TO 85°C MIN	-40°C TO 85°C MAX	-55°C TO 125°C MIN	-55°C TO 125°C MAX	UNITS
HCT TYPES											
Propagation Delay Clock to I/O Output, Clock to Q0 and Q7	t_{PHL}, t_{PLH}	C_L = 50pF	4.5	-	-	45	-	56	-	68	ns
		C_L = 15pF	5	-	19	-	-	-	-	-	ns
$\overline{MR}$ to Output	t_{PHL}, t_{PLH}	C_L = 50pF	4.5	-	-	46	-	58	-	69	ns
Output Enable and Disable Times	t_{PZL}, t_{PZH}, t_{PLZ}, t_{PHZ}	C_L = 15pF	5	-	10, 13, 15	-	-	-	-	-	ns
Output High-Z to High Level	t_{PZH}	C_L = 50pF	4.5	-	-	32	-	40	-	48	ns
Output High Level to High-Z	t_{PHZ}	C_L = 50pF	4.5	-	-	37	-	46	-	56	ns
Output Low Level to High-Z	t_{PLZ}	C_L = 50pF	4.5	-	-	32	-	40	-	48	ns
Output High-Z to Low Level	t_{PZL}	C_L = 50pF	4.5	-	-	30	-	38	-	45	ns
Output Transition Time Q0, Q7	t_{TLH}, t_{THL}	C_L = 50pF	4.5	-	-	15	-	19	-	22	ns
I/O_0 to I/O_7		C_L = 50pF	4.5	-	-	12	-	15	-	18	ns
Input Capacitance	C_{IN}	C_L = 50pF	-	10	-	10	-	10	-	10	pF
Three-State Output Capacitance	C_O	-	-	20	-	20	-	20	-	20	pF
Power Dissipation Capacitance (Notes 3, 4)	C_{PD}	C_L = 15pF	5	-	170	-	-	-	-	-	pF

NOTES:

3. C_{PD} is used to determine the dynamic power consumption, per register.
4. $P_D = C_{PD} V_{CC}^2 f_i + \Sigma (C_L V_{CC}^2 f_O)$ where f_i = Input Frequency, f_O = Output Frequency, C_L = Output Load Capacitance, V_{CC} = Supply Voltage.

Test Circuits and Waveforms

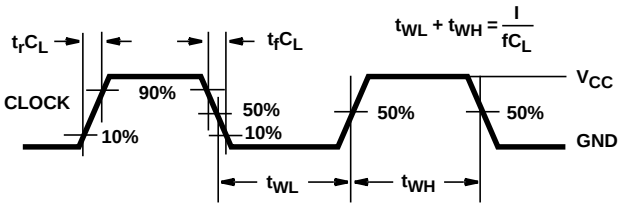

NOTE: Outputs should be switching from 10% V_{CC} to 90% V_{CC} in accordance with device truth table. For f_{MAX}, input duty cycle = 50%.

FIGURE 1. HC CLOCK PULSE RISE AND FALL TIMES AND PULSE WIDTH

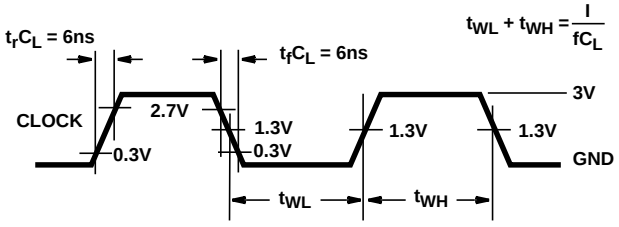

NOTE: Outputs should be switching from 10% V_{CC} to 90% V_{CC} in accordance with device truth table. For f_{MAX}, input duty cycle = 50%.

FIGURE 2. HCT CLOCK PULSE RISE AND FALL TIMES AND PULSE WIDTH

Test Circuits and Waveforms (Continued)

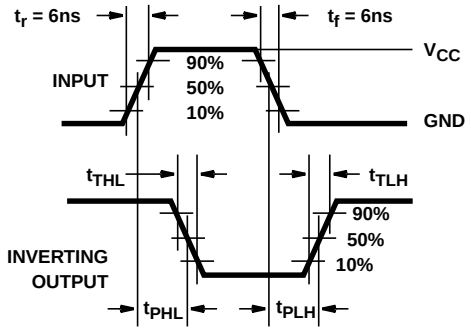

FIGURE 3. HC TRANSITION TIMES AND PROPAGATION DELAY TIMES, COMBINATION LOGIC

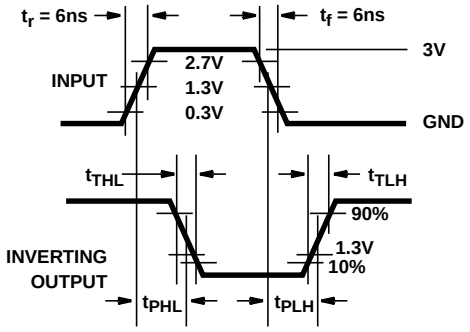

FIGURE 4. HCT TRANSITION TIMES AND PROPAGATION DELAY TIMES, COMBINATION LOGIC

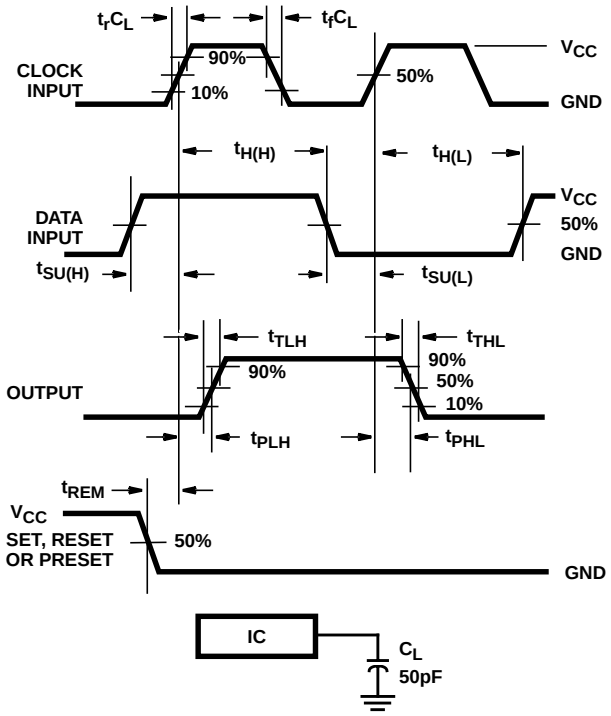

FIGURE 5. HC SETUP TIMES, HOLD TIMES, REMOVAL TIME, AND PROPAGATION DELAY TIMES FOR EDGE TRIGGERED SEQUENTIAL LOGIC CIRCUITS

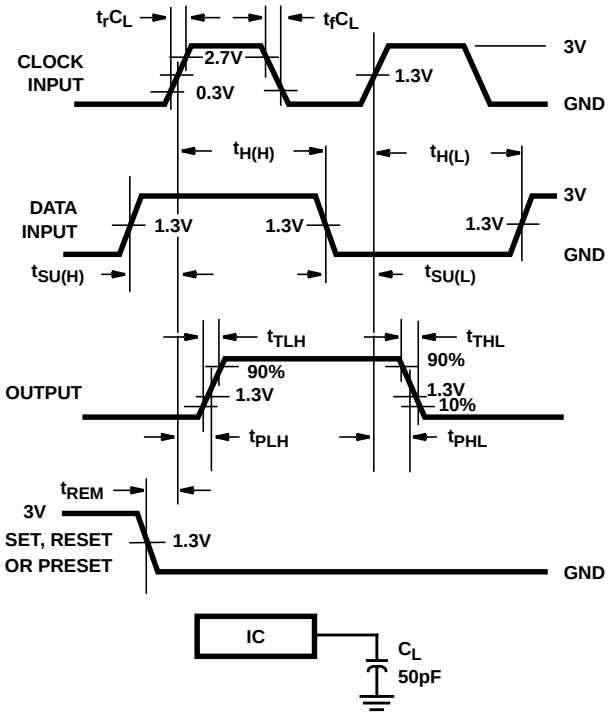

FIGURE 6. HCT SETUP TIMES, HOLD TIMES, REMOVAL TIME, AND PROPAGATION DELAY TIMES FOR EDGE TRIGGERED SEQUENTIAL LOGIC CIRCUITS

Test Circuits and Waveforms (Continued)

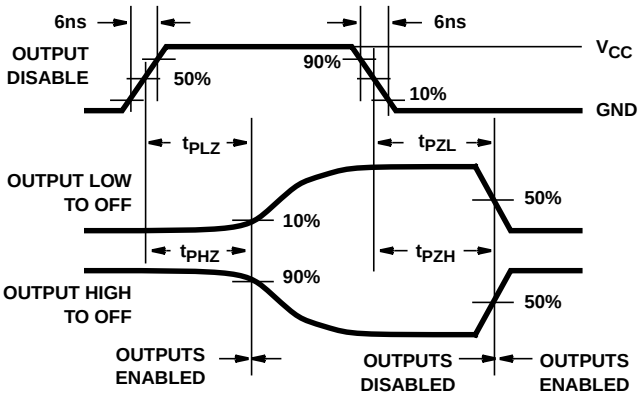

FIGURE 7. HC THREE-STATE PROPAGATION DELAY WAVEFORM

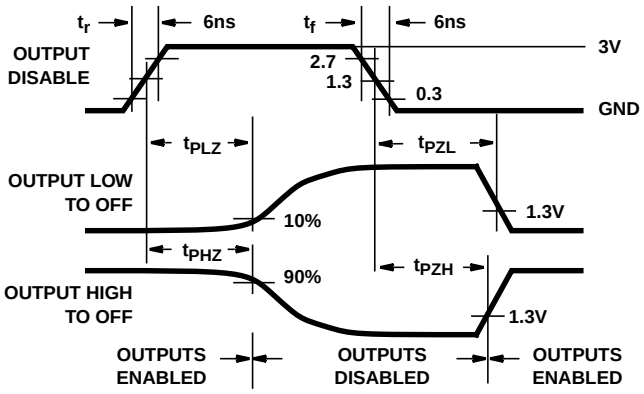

FIGURE 8. HCT THREE-STATE PROPAGATION DELAY WAVEFORM

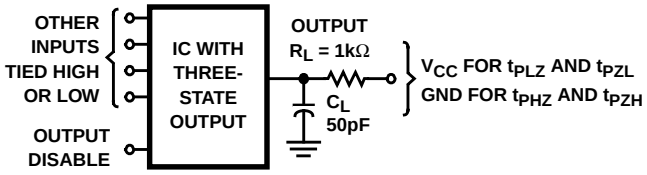

NOTE: Open drain waveforms t_{PLZ} and t_{PZL} are the same as those for three-state shown on the left. The test circuit is Output R_L = 1kΩ to V_{CC}, C_L = 50pF.

FIGURE 9. HC AND HCT THREE-STATE PROPAGATION DELAY TEST CIRCUIT

PACKAGING INFORMATION

Orderable Device	Status (1)	Package Type	Package Drawing	Pins	Package Qty	Eco Plan (2)	Lead/Ball Finish (6)	MSL Peak Temp (3)	Op Temp (°C)	Device Marking (4/5)	Samples
5962-8780601RA	ACTIVE	CDIP	J	20	1	TBD	A42	N / A for Pkg Type	-55 to 125	5962-8780601RA CD54HC299F3A	Samples
5962-8943601MRA	ACTIVE	CDIP	J	20	1	TBD	A42	N / A for Pkg Type	-55 to 125	5962-8943601MR A CD54HCT299F3A	Samples
CD54HC299F	ACTIVE	CDIP	J	20	1	TBD	A42	N / A for Pkg Type	-55 to 125	CD54HC299F	Samples
CD54HC299F3A	ACTIVE	CDIP	J	20	1	TBD	A42	N / A for Pkg Type	-55 to 125	5962-8780601RA CD54HC299F3A	Samples
CD54HCT299F3A	ACTIVE	CDIP	J	20	1	TBD	A42	N / A for Pkg Type	-55 to 125	5962-8943601MR A CD54HCT299F3A	Samples
CD74HC299E	ACTIVE	PDIP	N	20	20	Pb-Free (RoHS)	CU NIPDAU	N / A for Pkg Type	-55 to 125	CD74HC299E	Samples
CD74HC299EE4	ACTIVE	PDIP	N	20	20	Pb-Free (RoHS)	CU NIPDAU	N / A for Pkg Type	-55 to 125	CD74HC299E	Samples
CD74HC299M	ACTIVE	SOIC	DW	20	25	Green (RoHS & no Sb/Br)	CU NIPDAU	Level-1-260C-UNLIM	-55 to 125	HC299M	Samples
CD74HC299M96	ACTIVE	SOIC	DW	20	2000	Green (RoHS & no Sb/Br)	CU NIPDAU	Level-1-260C-UNLIM	-55 to 125	HC299M	Samples
CD74HC299M96E4	ACTIVE	SOIC	DW	20	2000	Green (RoHS & no Sb/Br)	CU NIPDAU	Level-1-260C-UNLIM	-55 to 125	HC299M	Samples
CD74HC299M96G4	ACTIVE	SOIC	DW	20		TBD	Call TI	Call TI	-55 to 125		Samples
CD74HC299ME4	ACTIVE	SOIC	DW	20	25	Green (RoHS & no Sb/Br)	CU NIPDAU	Level-1-260C-UNLIM	-55 to 125	HC299M	Samples
CD74HC299MG4	ACTIVE	SOIC	DW	20	25	Green (RoHS & no Sb/Br)	CU NIPDAU	Level-1-260C-UNLIM	-55 to 125	HC299M	Samples
CD74HCT299E	ACTIVE	PDIP	N	20	20	Pb-Free (RoHS)	CU NIPDAU	N / A for Pkg Type	-55 to 125	CD74HCT299E	Samples
CD74HCT299EE4	ACTIVE	PDIP	N	20	20	Pb-Free (RoHS)	CU NIPDAU	N / A for Pkg Type	-55 to 125	CD74HCT299E	Samples
CD74HCT299M	ACTIVE	SOIC	DW	20	25	Green (RoHS & no Sb/Br)	CU NIPDAU	Level-1-260C-UNLIM	-55 to 125	HCT299M	Samples

Orderable Device	Status (1)	Package Type	Package Drawing	Pins	Package Qty	Eco Plan (2)	Lead/Ball Finish (6)	MSL Peak Temp (3)	Op Temp (°C)	Device Marking (4/5)	Samples
CD74HCT299M96	ACTIVE	SOIC	DW	20	2000	Green (RoHS & no Sb/Br)	CU NIPDAU	Level-1-260C-UNLIM	-55 to 125	HCT299M	Samples
CD74HCT299M96G4	ACTIVE	SOIC	DW	20	2000	Green (RoHS & no Sb/Br)	CU NIPDAU	Level-1-260C-UNLIM	-55 to 125	HCT299M	Samples
CD74HCT299MG4	ACTIVE	SOIC	DW	20	25	Green (RoHS & no Sb/Br)	CU NIPDAU	Level-1-260C-UNLIM	-55 to 125	HCT299M	Samples

(1) The marketing status values are defined as follows:
ACTIVE: Product device recommended for new designs.
LIFEBUY: TI has announced that the device will be discontinued, and a lifetime-buy period is in effect.
NRND: Not recommended for new designs. Device is in production to support existing customers, but TI does not recommend using this part in a new design.
PREVIEW: Device has been announced but is not in production. Samples may or may not be available.
OBSOLETE: TI has discontinued the production of the device.

(2) Eco Plan - The planned eco-friendly classification: Pb-Free (RoHS), Pb-Free (RoHS Exempt), or Green (RoHS & no Sb/Br) - please check http://www.ti.com/productcontent for the latest availability information and additional product content details.
TBD: The Pb-Free/Green conversion plan has not been defined.
Pb-Free (RoHS): TI's terms "Lead-Free" or "Pb-Free" mean semiconductor products that are compatible with the current RoHS requirements for all 6 substances, including the requirement that lead not exceed 0.1% by weight in homogeneous materials. Where designed to be soldered at high temperatures, TI Pb-Free products are suitable for use in specified lead-free processes.
Pb-Free (RoHS Exempt): This component has a RoHS exemption for either 1) lead-based flip-chip solder bumps used between the die and package, or 2) lead-based die adhesive used between the die and leadframe. The component is otherwise considered Pb-Free (RoHS compatible) as defined above.
Green (RoHS & no Sb/Br): TI defines "Green" to mean Pb-Free (RoHS compatible), and free of Bromine (Br) and Antimony (Sb) based flame retardants (Br or Sb do not exceed 0.1% by weight in homogeneous material)

(3) MSL, Peak Temp. - The Moisture Sensitivity Level rating according to the JEDEC industry standard classifications, and peak solder temperature.

(4) There may be additional marking, which relates to the logo, the lot trace code information, or the environmental category on the device.

(5) Multiple Device Markings will be inside parentheses. Only one Device Marking contained in parentheses and separated by a "~" will appear on a device. If a line is indented then it is a continuation of the previous line and the two combined represent the entire Device Marking for that device.

(6) Lead/Ball Finish - Orderable Devices may have multiple material finish options. Finish options are separated by a vertical ruled line. Lead/Ball Finish values may wrap to two lines if the finish value exceeds the maximum column width.

Important Information and Disclaimer: The information provided on this page represents TI's knowledge and belief as of the date that it is provided. TI bases its knowledge and belief on information provided by third parties, and makes no representation or warranty as to the accuracy of such information. Efforts are underway to better integrate information from third parties. TI has taken and continues to take reasonable steps to provide representative and accurate information but may not have conducted destructive testing or chemical analysis on incoming materials and chemicals. TI and TI suppliers consider certain information to be proprietary, and thus CAS numbers and other limited information may not be available for release.

In no event shall TI's liability arising out of such information exceed the total purchase price of the TI part(s) at issue in this document sold by TI to Customer on an annual basis.

OTHER QUALIFIED VERSIONS OF CD54HC299, CD54HCT299, CD74HC299, CD74HCT299 :

- Catalog: CD74HC299, CD74HCT299
- Military: CD54HC299, CD54HCT299

NOTE: Qualified Version Definitions:

- Catalog - TI's standard catalog product
- Military - QML certified for Military and Defense Applications

TAPE AND REEL INFORMATION

REEL DIMENSIONS

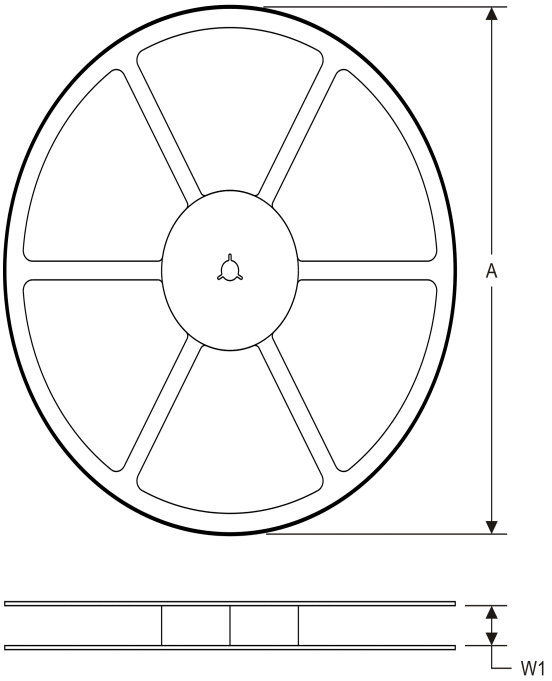

TAPE DIMENSIONS

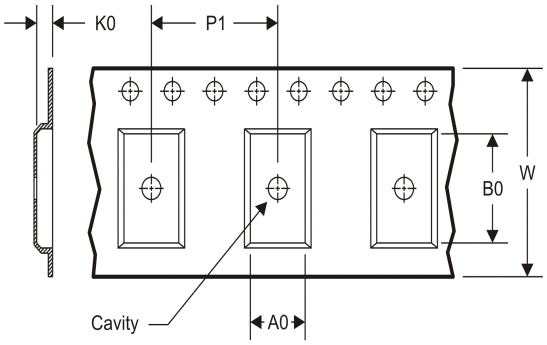

A0	Dimension designed to accommodate the component width
B0	Dimension designed to accommodate the component length
K0	Dimension designed to accommodate the component thickness
W	Overall width of the carrier tape
P1	Pitch between successive cavity centers

TAPE AND REEL INFORMATION

*All dimensions are nominal

Device	Package Type	Package Drawing	Pins	SPQ	Reel Diameter (mm)	Reel Width W1 (mm)	A0 (mm)	B0 (mm)	K0 (mm)	P1 (mm)	W (mm)	Pin1 Quadrant
CD74HC299M96	SOIC	DW	20	2000	330.0	24.4	10.8	13.0	2.7	12.0	24.0	Q1
CD74HCT299M96	SOIC	DW	20	2000	330.0	24.4	10.8	13.0	2.7	12.0	24.0	Q1

TAPE AND REEL BOX DIMENSIONS

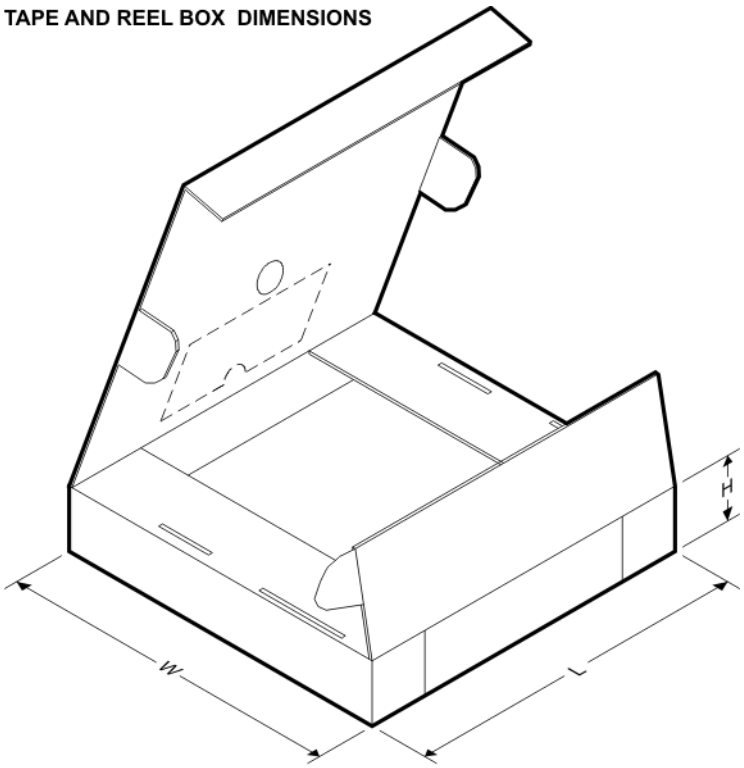

*All dimensions are nominal

Device	Package Type	Package Drawing	Pins	SPQ	Length (mm)	Width (mm)	Height (mm)
CD74HC299M96	SOIC	DW	20	2000	367.0	367.0	45.0
CD74HCT299M96	SOIC	DW	20	2000	367.0	367.0	45.0

J (R–GDIP–T**)

14 LEADS SHOWN

CERAMIC DUAL IN–LINE PACKAGE

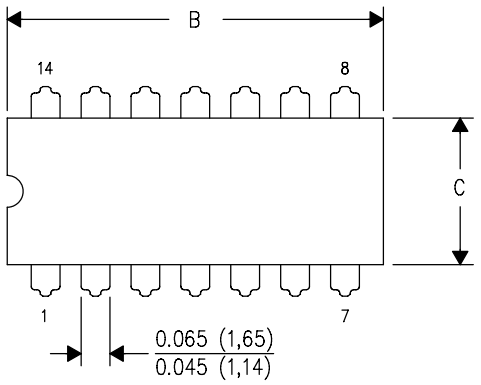

DIM \ PINS **	14	16	18	20
A	0.300 (7,62) BSC	0.300 (7,62) BSC	0.300 (7,62) BSC	0.300 (7,62) BSC
B MAX	0.785 (19,94)	.840 (21,34)	0.960 (24,38)	1.060 (26,92)
B MIN	—	—	—	—
C MAX	0.300 (7,62)	0.300 (7,62)	0.310 (7,87)	0.300 (7,62)
C MIN	0.245 (6,22)	0.245 (6,22)	0.220 (5,59)	0.245 (6,22)

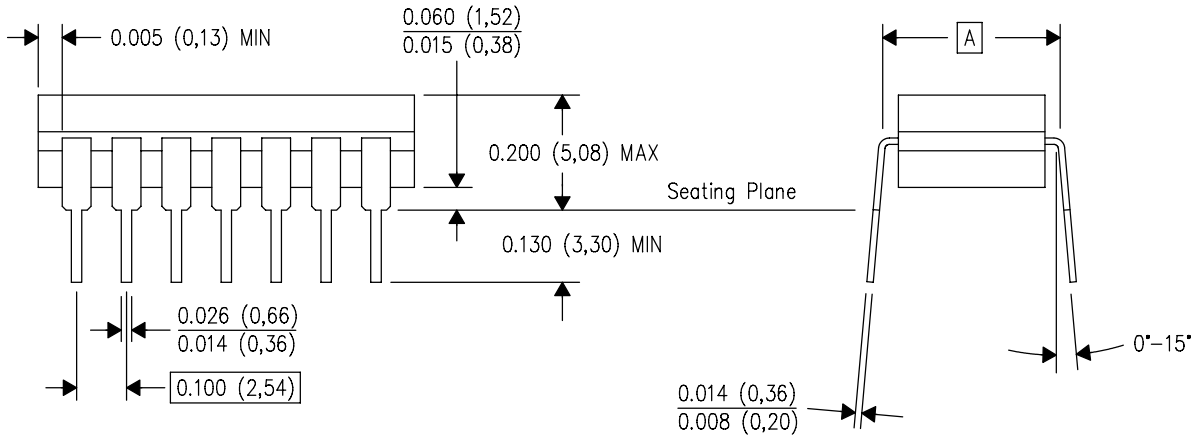

4040083/F 03/03

NOTES:
A. All linear dimensions are in inches (millimeters).
B. This drawing is subject to change without notice.
C. This package is hermetically sealed with a ceramic lid using glass frit.
D. Index point is provided on cap for terminal identification only on press ceramic glass frit seal only.
E. Falls within MIL STD 1835 GDIP1–T14, GDIP1–T16, GDIP1–T18 and GDIP1–T20.

N (R–PDIP–T**)

PLASTIC DUAL–IN–LINE PACKAGE

16 PINS SHOWN

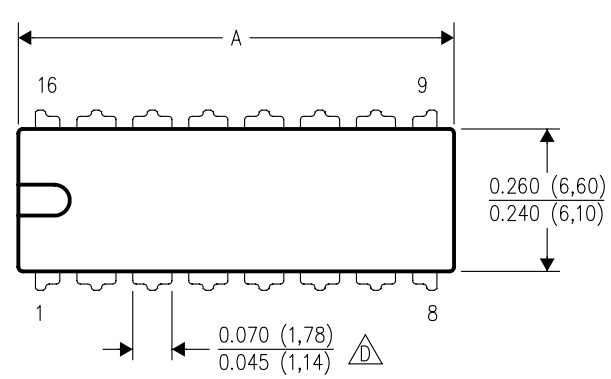

DIM \ PINS **	14	16	18	20
A MAX	0.775 (19,69)	0.775 (19,69)	0.920 (23,37)	1.060 (26,92)
A MIN	0.745 (18,92)	0.745 (18,92)	0.850 (21,59)	0.940 (23,88)
MS–001 VARIATION (C)	AA	BB	AC	AD

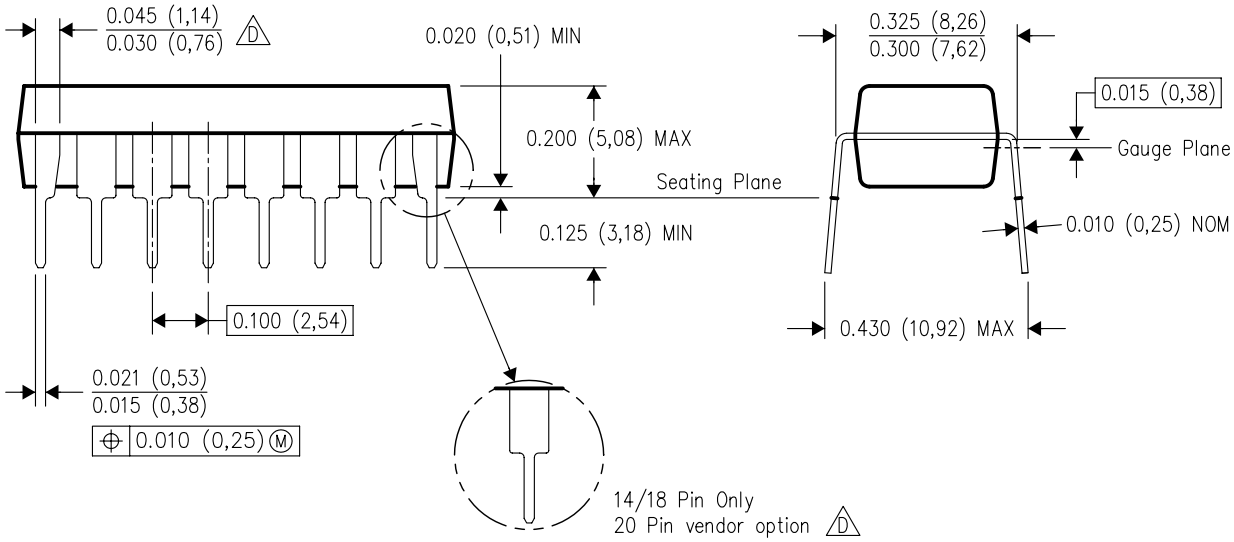

4040049/E 12/2002

NOTES:
A. All linear dimensions are in inches (millimeters).
B. This drawing is subject to change without notice.
C. Falls within JEDEC MS–001, except 18 and 20 pin minimum body length (Dim A).
D. The 20 pin end lead shoulder width is a vendor option, either half or full width.

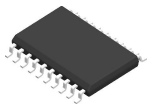

PACKAGE OUTLINE

DW0020A

SOIC - 2.65 mm max height

SOIC

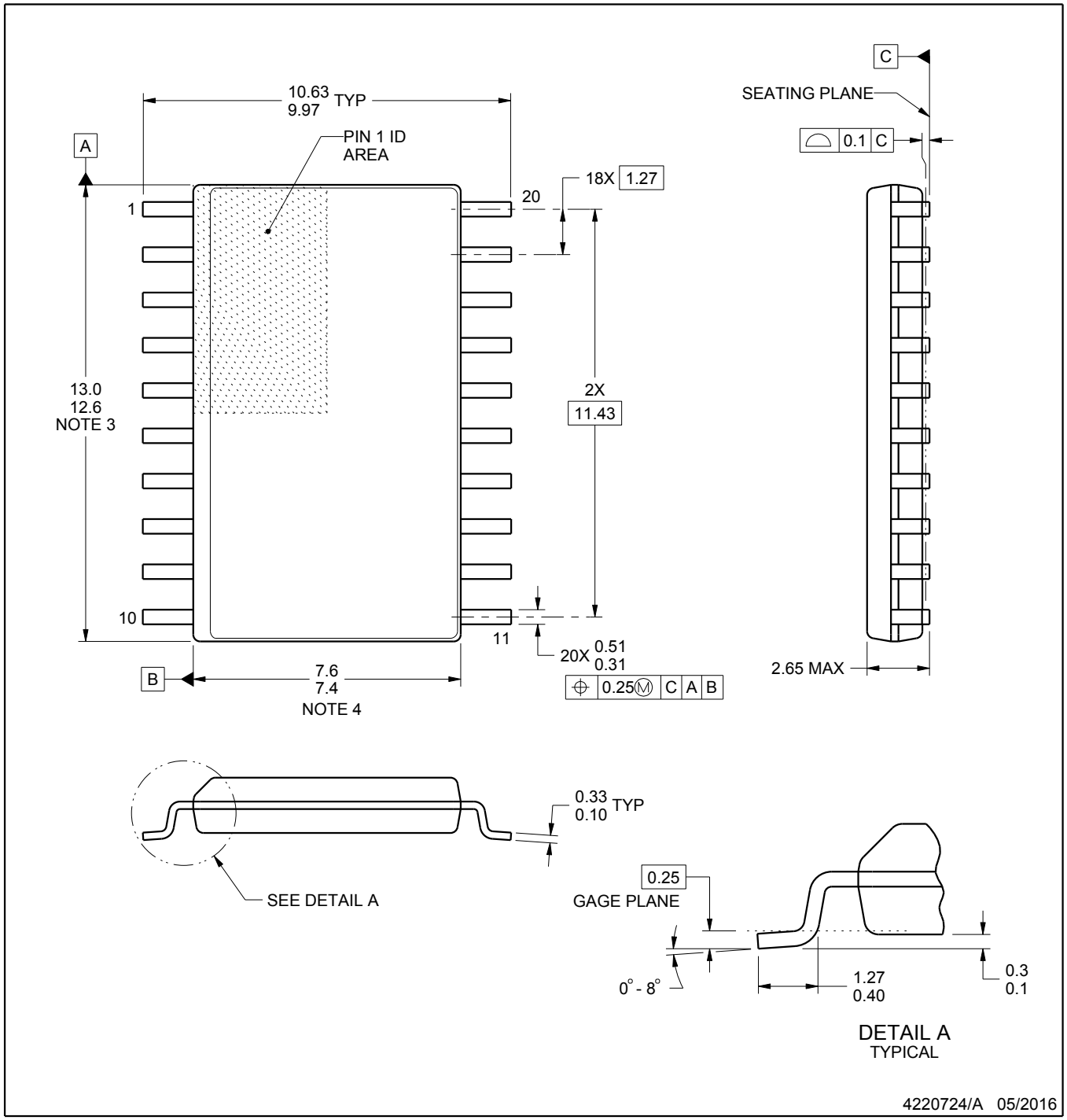

NOTES:

1. All linear dimensions are in millimeters. Dimensions in parenthesis are for reference only. Dimensioning and tolerancing per ASME Y14.5M.
2. This drawing is subject to change without notice.
3. This dimension does not include mold flash, protrusions, or gate burrs. Mold flash, protrusions, or gate burrs shall not exceed 0.15 mm per side.
4. This dimension does not include interlead flash. Interlead flash shall not exceed 0.43 mm per side.
5. Reference JEDEC registration MS-013.

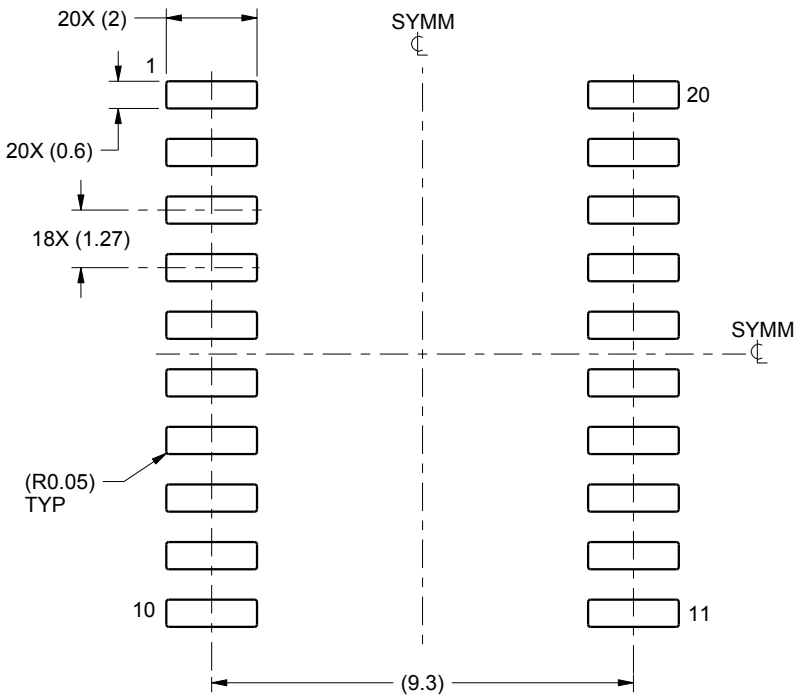

LAND PATTERN EXAMPLE
SCALE:6X

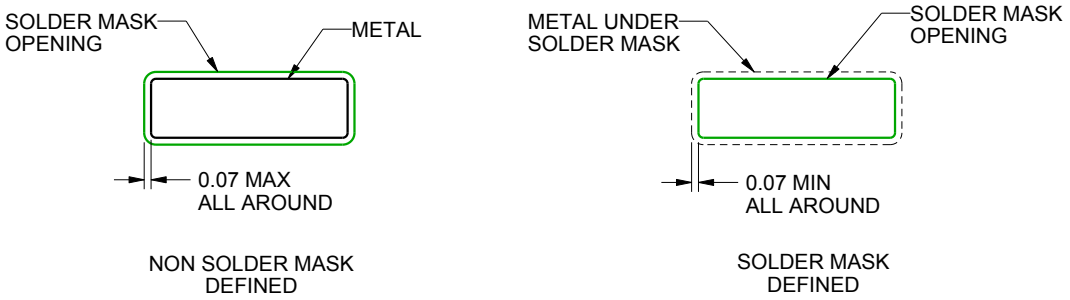

SOLDER MASK DETAILS

4220724/A 05/2016

NOTES: (continued)

6. Publication IPC-7351 may have alternate designs.
7. Solder mask tolerances between and around signal pads can vary based on board fabrication site.

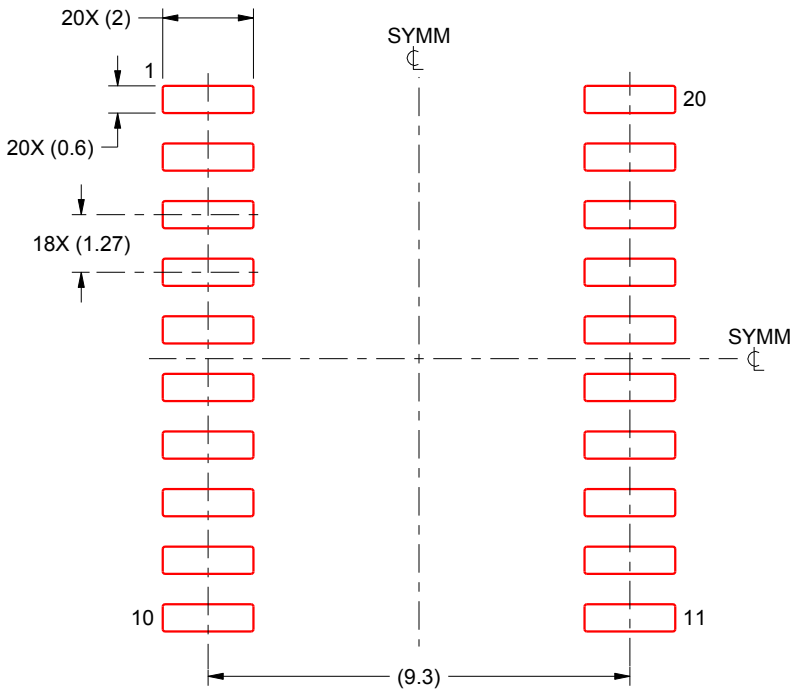

SOLDER PASTE EXAMPLE
BASED ON 0.125 mm THICK STENCIL
SCALE:6X

4220724/A 05/2016

NOTES: (continued)

8. Laser cutting apertures with trapezoidal walls and rounded corners may offer better paste release. IPC-7525 may have alternate design recommendations.
9. Board assembly site may have different recommendations for stencil design.

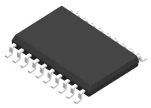

PACKAGE OUTLINE

DW0020A

SOIC - 2.65 mm max height

SOIC

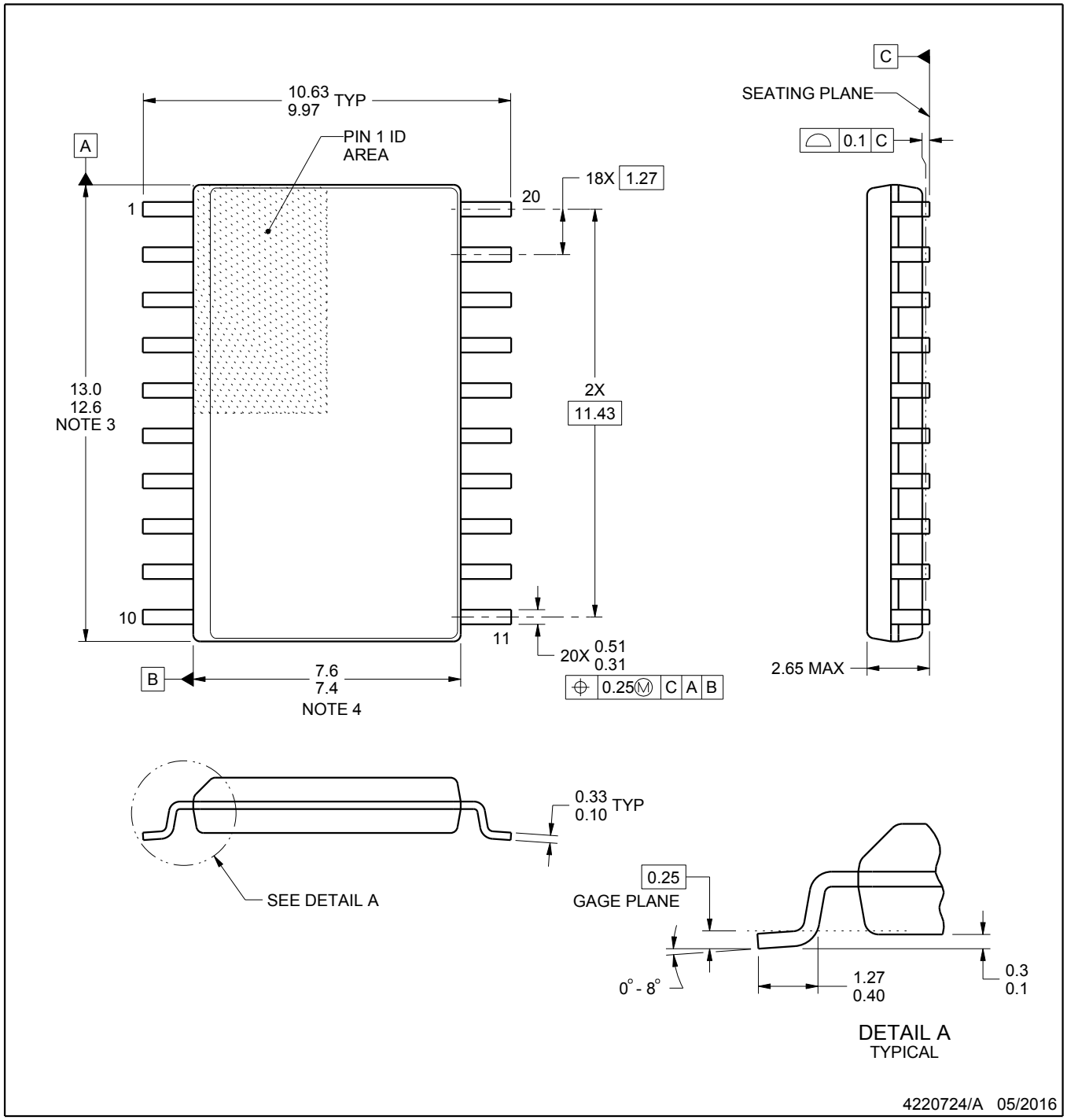

NOTES:

1. All linear dimensions are in millimeters. Dimensions in parenthesis are for reference only. Dimensioning and tolerancing per ASME Y14.5M.
2. This drawing is subject to change without notice.
3. This dimension does not include mold flash, protrusions, or gate burrs. Mold flash, protrusions, or gate burrs shall not exceed 0.15 mm per side.
4. This dimension does not include interlead flash. Interlead flash shall not exceed 0.43 mm per side.
5. Reference JEDEC registration MS-013.

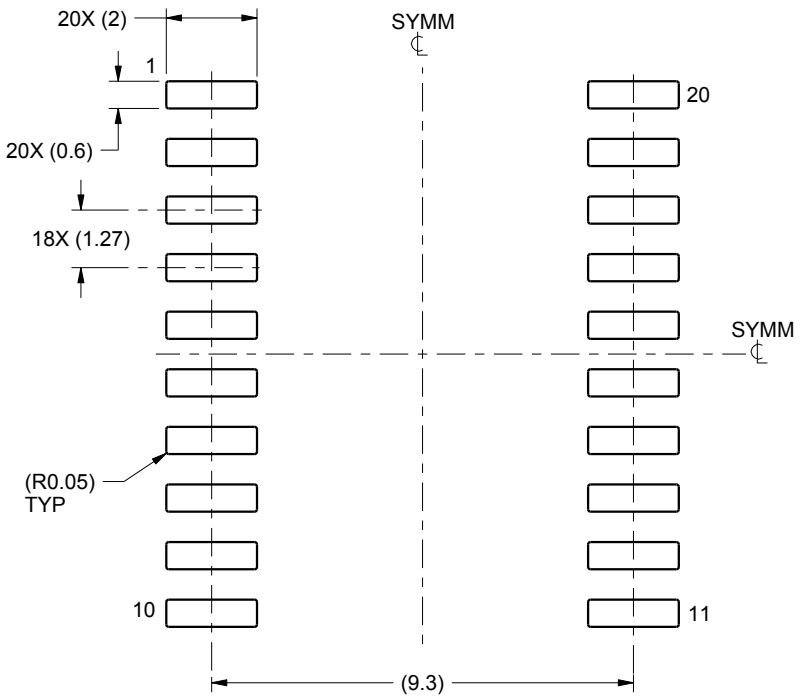

LAND PATTERN EXAMPLE
SCALE:6X

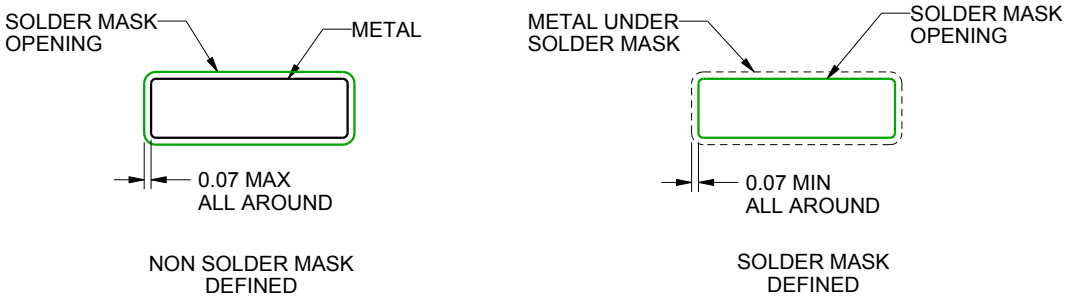

SOLDER MASK DETAILS

4220724/A 05/2016

NOTES: (continued)

6. Publication IPC-7351 may have alternate designs.
7. Solder mask tolerances between and around signal pads can vary based on board fabrication site.

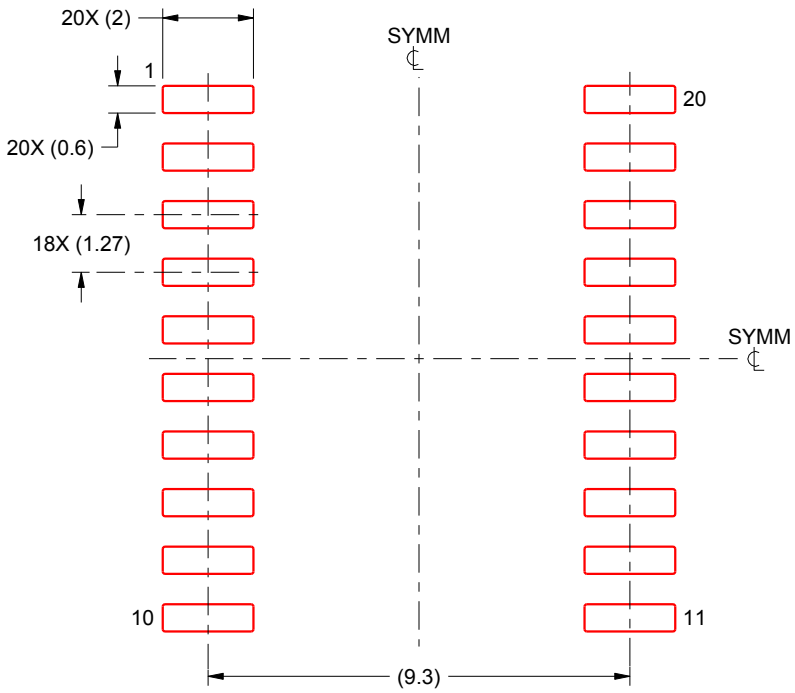

SOLDER PASTE EXAMPLE
BASED ON 0.125 mm THICK STENCIL
SCALE:6X

4220724/A 05/2016

NOTES: (continued)

8. Laser cutting apertures with trapezoidal walls and rounded corners may offer better paste release. IPC-7525 may have alternate design recommendations.
9. Board assembly site may have different recommendations for stencil design.

IMPORTANT NOTICE

Texas Instruments Incorporated and its subsidiaries (TI) reserve the right to make corrections, enhancements, improvements and other changes to its semiconductor products and services per JESD46, latest issue, and to discontinue any product or service per JESD48, latest issue. Buyers should obtain the latest relevant information before placing orders and should verify that such information is current and complete. All semiconductor products (also referred to herein as “components”) are sold subject to TI’s terms and conditions of sale supplied at the time of order acknowledgment.

TI warrants performance of its components to the specifications applicable at the time of sale, in accordance with the warranty in TI’s terms and conditions of sale of semiconductor products. Testing and other quality control techniques are used to the extent TI deems necessary to support this warranty. Except where mandated by applicable law, testing of all parameters of each component is not necessarily performed.

TI assumes no liability for applications assistance or the design of Buyers’ products. Buyers are responsible for their products and applications using TI components. To minimize the risks associated with Buyers’ products and applications, Buyers should provide adequate design and operating safeguards.

TI does not warrant or represent that any license, either express or implied, is granted under any patent right, copyright, mask work right, or other intellectual property right relating to any combination, machine, or process in which TI components or services are used. Information published by TI regarding third-party products or services does not constitute a license to use such products or services or a warranty or endorsement thereof. Use of such information may require a license from a third party under the patents or other intellectual property of the third party, or a license from TI under the patents or other intellectual property of TI.

Reproduction of significant portions of TI information in TI data books or data sheets is permissible only if reproduction is without alteration and is accompanied by all associated warranties, conditions, limitations, and notices. TI is not responsible or liable for such altered documentation. Information of third parties may be subject to additional restrictions.

Resale of TI components or services with statements different from or beyond the parameters stated by TI for that component or service voids all express and any implied warranties for the associated TI component or service and is an unfair and deceptive business practice. TI is not responsible or liable for any such statements.

Buyer acknowledges and agrees that it is solely responsible for compliance with all legal, regulatory and safety-related requirements concerning its products, and any use of TI components in its applications, notwithstanding any applications-related information or support that may be provided by TI. Buyer represents and agrees that it has all the necessary expertise to create and implement safeguards which anticipate dangerous consequences of failures, monitor failures and their consequences, lessen the likelihood of failures that might cause harm and take appropriate remedial actions. Buyer will fully indemnify TI and its representatives against any damages arising out of the use of any TI components in safety-critical applications.

In some cases, TI components may be promoted specifically to facilitate safety-related applications. With such components, TI’s goal is to help enable customers to design and create their own end-product solutions that meet applicable functional safety standards and requirements. Nonetheless, such components are subject to these terms.

No TI components are authorized for use in FDA Class III (or similar life-critical medical equipment) unless authorized officers of the parties have executed a special agreement specifically governing such use.

Only those TI components which TI has specifically designated as military grade or “enhanced plastic” are designed and intended for use in military/aerospace applications or environments. Buyer acknowledges and agrees that any military or aerospace use of TI components which have ***not*** been so designated is solely at the Buyer's risk, and that Buyer is solely responsible for compliance with all legal and regulatory requirements in connection with such use.

TI has specifically designated certain components as meeting ISO/TS16949 requirements, mainly for automotive use. In any case of use of non-designated products, TI will not be responsible for any failure to meet ISO/TS16949.

Products		**Applications**	
Audio	www.ti.com/audio	Automotive and Transportation	www.ti.com/automotive
Amplifiers	amplifier.ti.com	Communications and Telecom	www.ti.com/communications
Data Converters	dataconverter.ti.com	Computers and Peripherals	www.ti.com/computers
DLP® Products	www.dlp.com	Consumer Electronics	www.ti.com/consumer-apps
DSP	dsp.ti.com	Energy and Lighting	www.ti.com/energy
Clocks and Timers	www.ti.com/clocks	Industrial	www.ti.com/industrial
Interface	interface.ti.com	Medical	www.ti.com/medical
Logic	logic.ti.com	Security	www.ti.com/security
Power Mgmt	power.ti.com	Space, Avionics and Defense	www.ti.com/space-avionics-defense
Microcontrollers	microcontroller.ti.com	Video and Imaging	www.ti.com/video
RFID	www.ti-rfid.com		
OMAP Applications Processors	www.ti.com/omap	**TI E2E Community**	e2e.ti.com
Wireless Connectivity	www.ti.com/wirelessconnectivity		

Mailing Address: Texas Instruments, Post Office Box 655303, Dallas, Texas 75265
Copyright © 2016, Texas Instruments Incorporated